GRID LOCATION BOTTOM ELEVATION	
1 /B	-2'-10 "1 /2

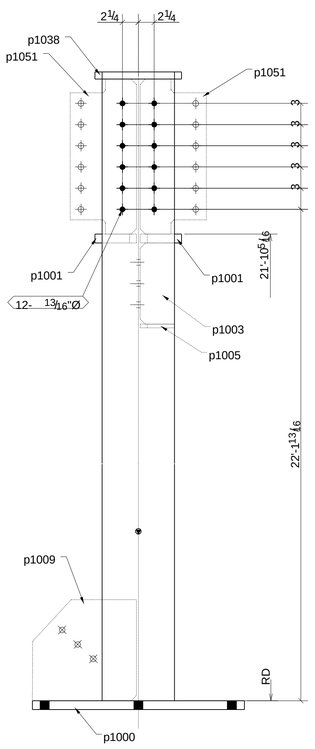

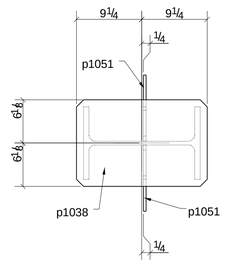

B-B

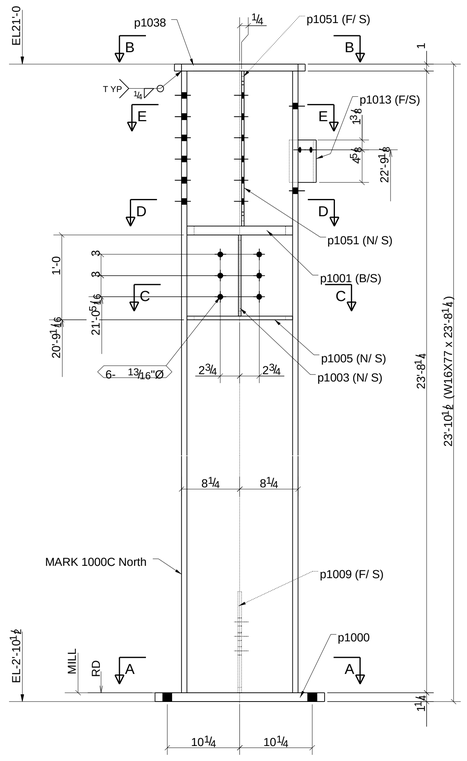

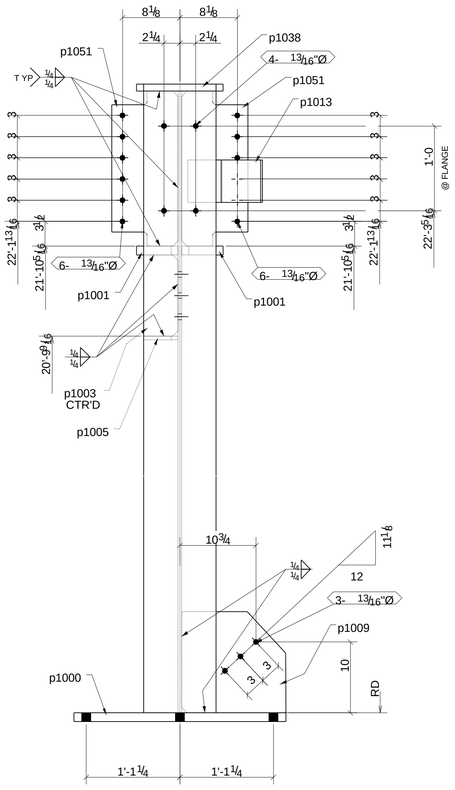

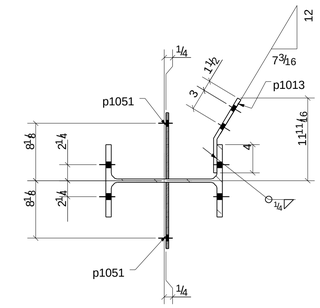

F -F

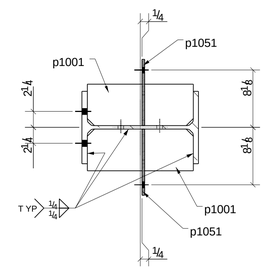

D -D

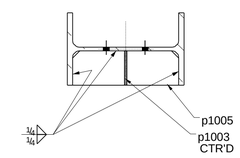

C -C

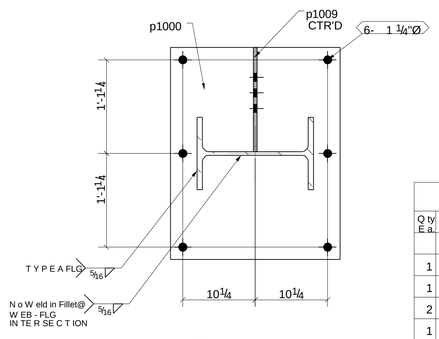

A-A

ONE - COLUMN- 1000C

BIL L OF MAT ERI AL

Qty Ea.	Qty Tot	Piece Mark	Des c r iption	Length	Weight Total	Remarks	Adv Mill#	Steel Grade
	1	1 00 0C	COLUMN					
1	1		W16X77	23'- 8 1/4"	18 22		10 00C	A992
1	1	p1 0 00	PL1 1/4" X24"	2'- 6"	2 55			A36
2	2	p1 0 01	PL1 1/4" X5 7/8"	1'- 3"	62			A36
1	1	p1 0 03	PL3/8" X4 7/8"	0'- 11 1/2"	6			A36
1	1	p1 0 05	PL1/2" X4 7/8"	1'- 3"	10			A36
1	1	p1 0 09	PL1/2" X14 5/16"	1'- 2 3/4"	28			A36
1	1	p1 0 13	FB1/2" X6"	0'- 11 1/4"	10			A36
1	1	p1 0 38	PL1" X12 1/4"	1'- 6 1/2"	64			A36
2	2	p1 0 51	PL3/8" X9 3/8"	1'- 9 15/16"	39			A36
	4		3/4"Ø A325N_TC BOLT	0'- 2 1/4"		Site GALVANIZE		

REF	E 1 0 01
MATERIAL	A 9 92
HOLES	1 3 /1 6" UNO
ALL COPES AND BLOCKS TO HAVE 1/ 2 RAD. U/N	
WELDS	E 7 0 XX (SEAL W EL DS TYP)
SURF. PREP.	S S P C- S P8
PAINT NOTE	HOT-DIP GALVANIZE

PROJECT NAME

LOCATION

CONTRACTOR

DESCRIPTION COLUMN

SEQUENCE

DATE	NO.	DESCRIPTION	BY
11 /2 1 /11	1	Issued For Fabrication	
09 /3 0 /2 011	0	Issued For Approval	

Oracle Steel Consultants Ltd.
www.oraclesteel.com.

DRAWN BY	CHECKED BY	JOB No.
R JL	EDG	11-0607
DATE 09 /2 6 /2011	DATE 09/30/2011	DRG No. 1000C

0